OSC|12
Ohio Safety Congress & Expo

WELL AT HOME. SAFE AT WORK.

345 Machine Guarding: What You Need to Know

Jim Washam

Thursday, March 29, 2:30 to 3:30 p.m.

Ohio | Bureau of Workers' Compensation

Machine Guarding

What You Need To Know

Jim Washam
Machine Guarding Coordinator
Region V

OSHA

Technologies

- Barrier Guards
- Safety Interlock Switches
- Non Contact Interlocks
- Guard Locking Devices
  - Trip Cords
  - Safety Mats
  - Safety edges
- Two hand trip controls
- Safety Light Curtains
- Safety Laser Scanners
  - Enabling Switch
  - Trap key Systems

- Many Safeguarding Methods Available
- But there are other considerations…….

OSHA

Safeguarding

- **1910.212** Types of guarding. One or more methods of machine guarding shall be provided to protect the operator and other employees in the machine area from hazards such as those created by point of operation, ingoing nip points, rotating parts, flying chips and sparks
- Section 1910.212 is a general machine guarding standard that applies to all machinery not otherwise covered by Subpart O.
- Applies to most machines and equipment
- Does not address quality of safeguarding or control systems

OSHA

1910.212 General Machine Guarding

- The proper application of devices are not described; **therefore, other similar OSHA or pertinent industry standards must be referred to for guidance.**

- 1910.217 Mechanical power presses
- ANSI standards

Details proper application of many safeguarding methods

OSHA

ANSI B11 Series Standards

ANSI B11.1—2001 *Safety Requirements for Mechanical Power Presses*

ANSI B11.2—1995 (R2000) *Hydraulic Power Presses – Safety Requirements for Construction, Care and Use*

ANSI B11.3—2002 *Safety Requirements for Power Press Brakes*

ANSI B11.4—2003 *Safety Requirements for Shears*

ANSI B11.5—1988 (R2002) *Iron Workers – Safety Requirements for Construction, Care and Use*

ANSI B11.6—2001 *Safety Requirements for Manual Turning Machines*

ANSI B11.7—1995 (R2000) *Cold Headers and Cold Formers – Safety Requirements for Construction, Care and Use*

ANSI B11.8—2001 *Safety Requirements for Manual Milling, Drilling, and Boring Machines*

ANSI B11.9—1975 (R1997) *Grinding Machines – Safety Requirements for Construction, Care and Use*

ANSI B11.10–2003 *Metal Sawing Machines – Safety Requirements for Construction, Care and Use*

ANSI B11.11–2001 *Safety Requirements for Gear & Spline Cutting Machines*

ANSI B11.12–1996 *Roll Forming and Roll Bending Machines – Safety Requirements for Construction, Care and Use*

ANSI B11.13–1992 (R1998) *Automatic Screw/Bar and Chucking Machines – Safety Requirements for Construction, Care and Use*

ANSI B11.14–1996 *Coil Slitting Machines – Safety Requirements for Construction, Care and Use*

ANSI B11.15–2001 *Safety Requirements for Pipe, Tube and Shape Bending Machines*

ANSI B11.17–1996 *Horizontal Hydraulic Extrusion Presses – Safety Requirements for Construction, Care and Use*

ANSI B11.18–1997 *Coil Processing Systems – Safety Requirements for Construction, Care and Use*

ANSI B11.20–1991 (R1998) *Manufacturing Systems / Cells – Safety Requirements for Construction, Care and Use*

ANSI B11.21–1997 *Machine Tools Using Lasers – Safety Requirements for Construction, Care and Use*

ANSI B11.22–2002 *Safety Requirements for Numerically Controlled Turning Machines*

ANSI B11.23–2002 *Safety Requirements for Machining Centers*

ANSI B11.24–2002 *Safety Requirements for Transfer Machines*

ANSI B11.19: Performance Criteria for Safeguarding

Purpose:

- Establish the requirements for the design, construction, installation, operation and maintenance of **safeguarding systems**.
- Applies to **all machine tools covered under the ANSI B11 Series Standards**.
- Many **other ANSI standards have incorporated** B11.19 requirements.

NOTE: Every Company Should Have A Copy

Control Component Failures

- Everything man made with moving parts will fail at some point in time.
- This includes all electrical and mechanical parts.
- These failures are anticipated and addressed by most consensus standards, such as ANSI in order to minimize the potential risks created by such failures.

Components of a basic safety circuit

All Components Are Capable Of Failing

Inputs	Logic Circuitry	Outputs
•Interlock Switches •Light Curtains •Other Electronic Safety Devices	• Relays • PLCs	Motor Contactor or Other Stopping Device

Interlocked Gates

What if the machine doesn't stop due to a failure in the control system?

Light Curtains

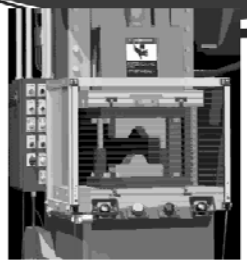

What if the machine doesn't stop due to a failure in the control system?

Interlock Switches

- Conventional spring-driven contacts failures can be associated welded contacts, broken springs, etc.
- Contacts failing in the closed position means that machine doesn't stop.

State of the Art *Interlocks*

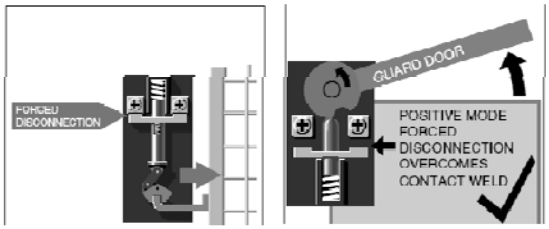

"Positive Break" Switches

How to Recognize "Positive Break" Switches

- This is the international symbol for a positive acting switch
- Most are red or yellow
- This is the standard to which the switch was built

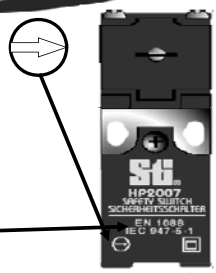

14

Relay Control Logic

- Relay/Contactors based control failures can be associated welded contacts, broken springs, etc.
- Contacts failing in the closed position means that machine doesn't stop.

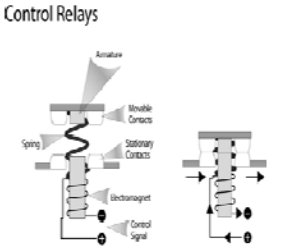

State of the Art Relays

- Force-guided (or positively-guided) relays have contacts that are mechanically interlocked such that two contacts on the relays will not contradict each other, even in the event that the relay welds.

How to Identify Forced Guided Relays

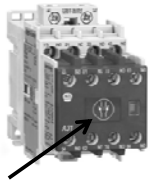

Mechanically Linked Contact Symbol on Front Face.

PLC Control Logic

- PLC based control failures can be associated with programming, magnetic fields, electrical surges, etc. A surge could cause a hazardous movement even while a machine is inactive, causing it to become active.
- **PLCs are not control reliable.** Safety control systems must be hard wired, and independent of the PLC, unless it is a **safety PLC.**

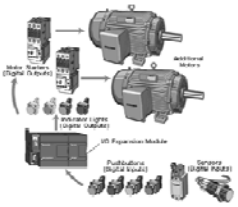

Light Curtains

WARNING! Never use this cat. 4 light curtain on a machine controlled by a PLC without first consulting the Manufacturer as to whether it should be used and how it should be connected to the control. Failure of the PLC control could cause the machine to fail to stop even though the light curtain is functioning Properly. If the control system is not designed to provide a stop signal to the machine in the event of a component failure or program fault Serious injury or death may result from the hazard intended to be safeguarded.

- Most light curtains meet category 4 control reliability requirements.
- If they are depended upon a standard PLC it would reduce the safety level of the safety circuit.
- Cat. 2 light curtains???

Type 2 Light Curtains

⚠ WARNING!

DO NOT use this Protective Light Curtain where a risk assessment has determined that *control reliability* is required, such as for hazardous machinery. Use only for equipment where the *worst-case* injury from an accident can be remedied by simple first aid, as determined by a thorough risk assessment.

Components of a safety circuit

All Components Are Capable Of Failing

Inputs	Logic Circuitry	Outputs
•Interlock Switches •Light Curtains •Other Electronic Safety Devices	• Relays • PLCs	Motor Contactor or Other Stopping Device

NOTE: Although positive break interlock switches and forced guided relays are less likely to fail, that doesn't mean a control reliable safety circuit.

Safety Circuit

- How does National Consensus Standards, such as ANSI address these issues?
- Risk assessment and risk reduction.

BASIC SYSTEM COMPONENTS

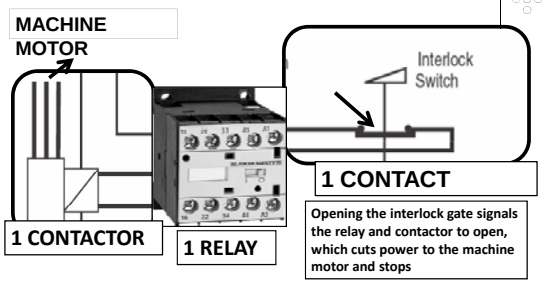

A single Failure in any component can prevent stopping of motor

Control Reliability

When the risk assessment indicates a serious injury potential from a **single component failure:**

The device, system or interface shall be designed, constructed and installed such that a single component failure within the device, interface or system shall not prevent **normal stopping action from taking place but shall prevent a successive machine cycle.**

Two parts to this requirement:

Part 1 – A single component failure must not prevent normal stopping

Part 2 – But the single failure must be detected, and prevent another cycle until the failure is corrected

Part 1. Single component failure doesn't prevent stopping

Theory: the chances of two components failing at same time is remote, so provide two components, commonly referred to as **redundancy or dual channel**. Both components working at the same time. If one component fails the other takes over and allows normal stopping.

24

A single Failure in system doesn't prevent stopping

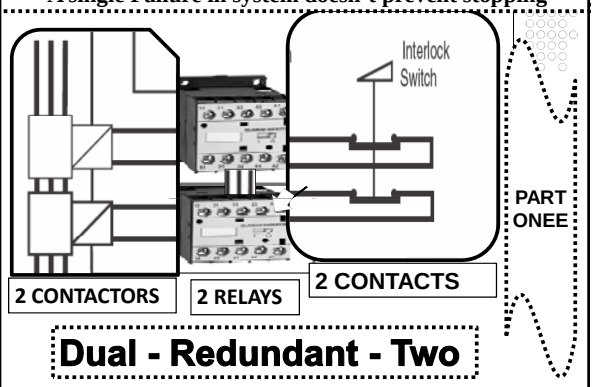

Part 2. Prevent initiation of a successive stroke until the failure is corrected

- This means that simple redundancy is not enough.
- If one component fails and we do not know it, it's just a matter of time until the second component fails and we are left with no protection.
- Must have a means to detect a single component failure and stop the machine until failure is corrected.

How do we monitor the circuit?

26

Safety Relay

- Replace relays with safety relay.
- A relay module containing one or multiple relays or solid state circuits wired together to provide a safety function such as a dual channel monitored light curtain or a two hand control function.
- One safety relay can replace several control relays.

Safety PLC

- Replace relays or standard PLC with a **certified safety PLC** designed for control reliability.
- Safety PLCs use redundant components, modules, devices, or systems, with the proper operation of each being verified **(monitored)** by the other to ensure proper **safety functions.**

Control Reliability = Redundancy and Monitoring of System

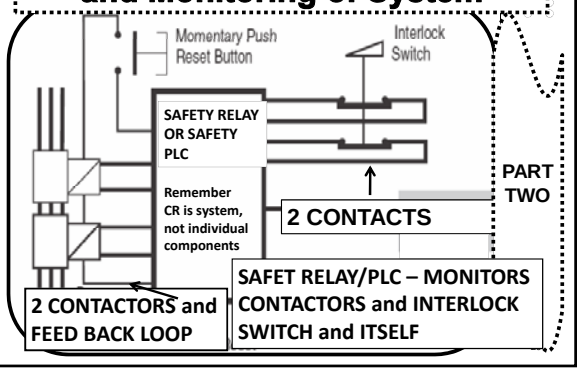

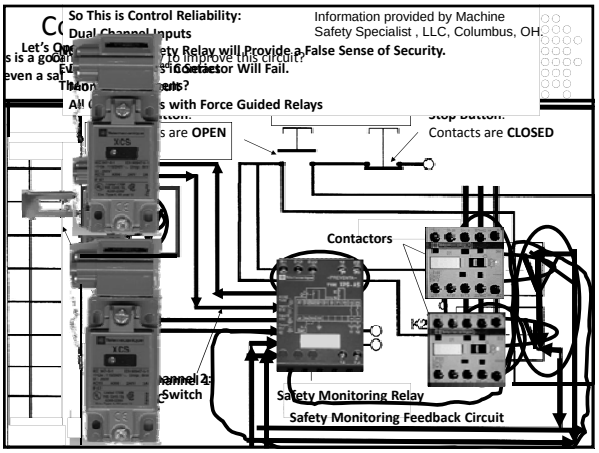

Special Thanks – Materials Provided By:

- **OMRON Scientific Technologies, Inc.**
http://www.sti.com

- **Machine Safety Specialists**, LLC
http://www.machinesafetyspecialists.com

Questions?

Jim Washam
Machine Guarding Coordinator
Region V

OSHA

- Points of view, ideas, products, demonstrations or devices presented or displayed at the Ohio Safety Congress & Expo do not constitute endorsements by BWC. BWC is not liable for any errors or omissions in event materials.

OSC|12
Ohio Safety Congress & Expo