EXAMPLES OF LADDERS CONSTRUCTED ON THE JOB

Example 11-1. Single cleat ladder.

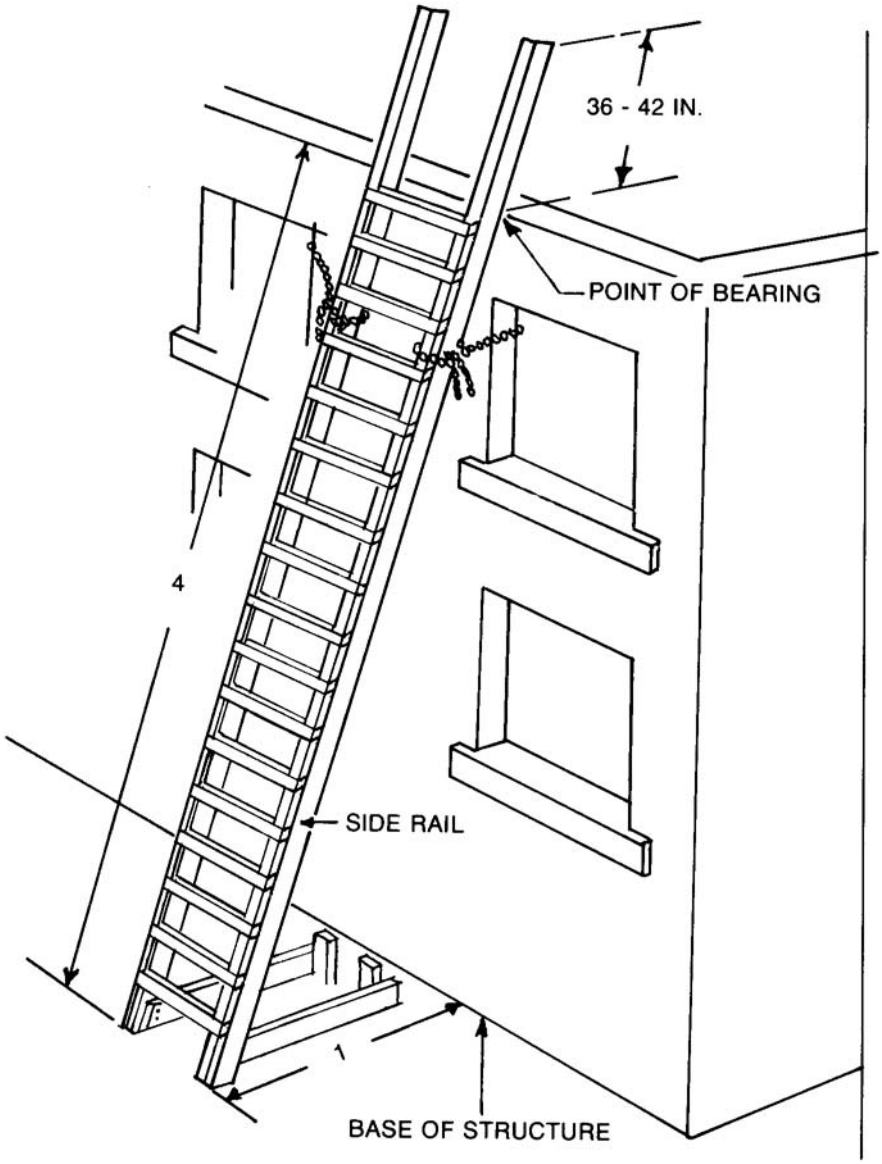

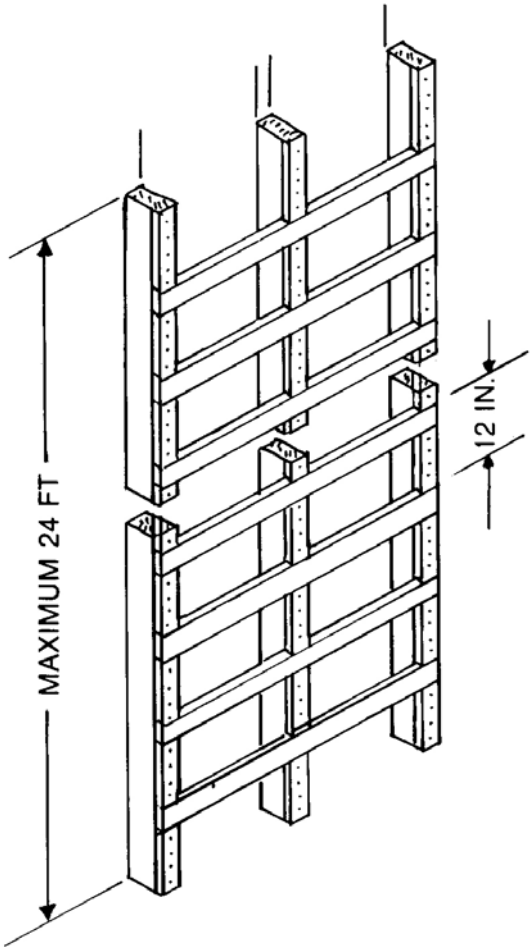

Example 11-2.
Double cleat ladder.

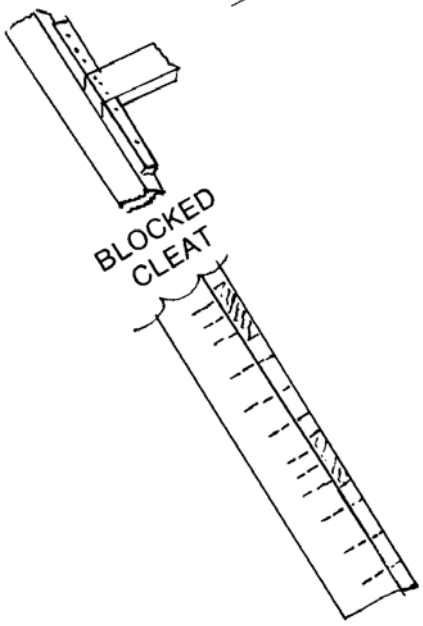

Example 11-3.
Blocked cleat.